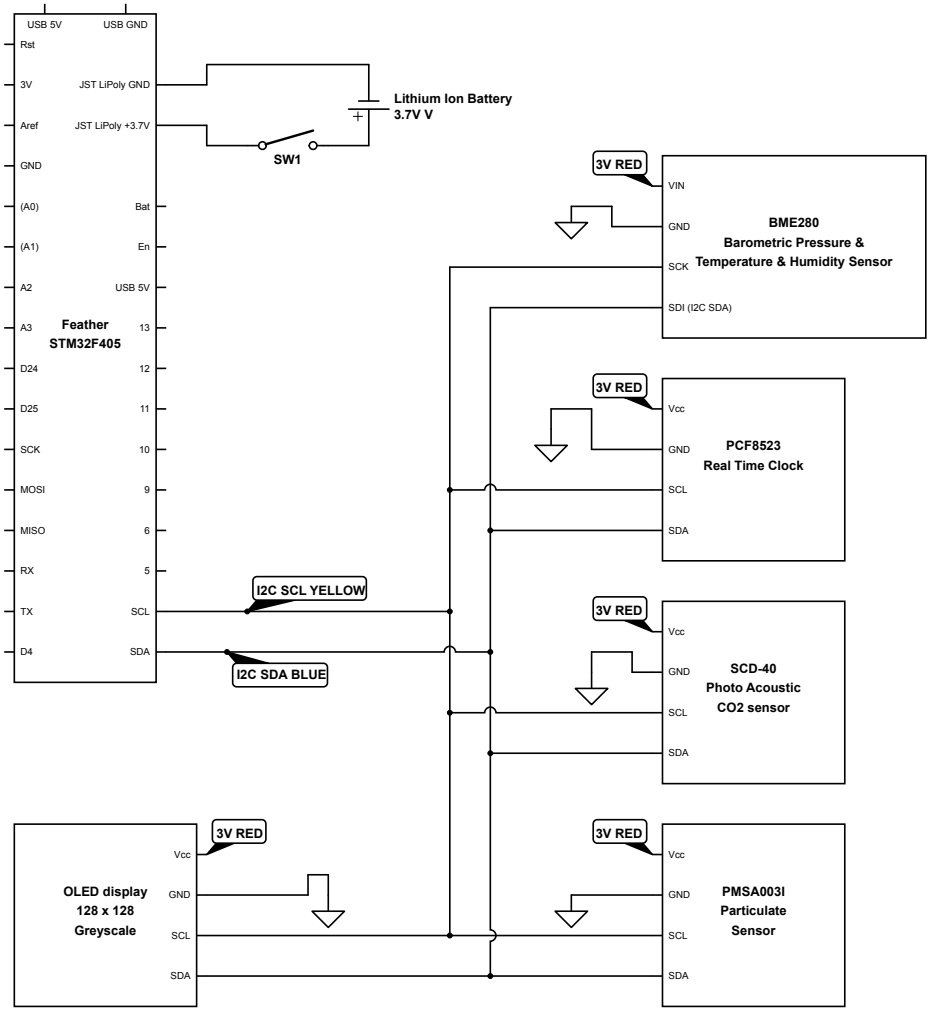

STELLA-AQ Instrument Schematic
Science and Technology Education
for Land/Life Assessment -
Air Quality
Paul Mirel 20231003